FURUNO

OPERATOR'S MANUAL

INTERFACE UNIT

MODEL IF-5000/5001

FURUNO ELECTRIC CO., LTD.
NISHINOMIYA, JAPAN

©FURUNO ELECTRIC CO., LTD.

9-52, Ashihara-cho,
Nishinomiya, Japan 662

Telephone: 0798-65-2111
Telefax: 0798-65-4200(GIII)

·Your Local Agent/Dealer

All rights reserved. Printed in Japan

Initial : MAR 1982
N : JAN. 27, 1997

PUB. No. OME-42740
(KAOK) IF-5000/5001

00080673500

⚠ SAFETY INSTRUCTIONS

"**DANGER**", "**WARNING**" and "**CAUTION**" notices appear throughout this manual. It is the responsibility of the operator of the equipment to read, understand and follow these notices. If you have any questions regarding these safety instructions, please contact a FURUNO agent or dealer.

The level of risk appearing in the notices is defined as follows:

⚠ **DANGER**	This notice indicates a potentially hazardous situation which, if not avoided, will result in death or serious injury.
⚠ **WARNING**	This notice indicates a potentially hazardous situation which, if not avoided, could result in death or serious injury.
⚠ **CAUTION**	This notice indicates a potentially hazardous situation which, if not avoided, could result in minor or moderate injury, or property damage.

⚠ WARNING

Do not open the equipment.

Hazardous voltage which can cause electrical shock, burn or serious injury exists inside the equipment. Only qualified personnel should work inside the equipment.

Do not disassemble or modify the equipment.

Fire, electrical shock or serious injury can result.

Turn off the power immediately if water leaks into the equipment or the equipment is emitting smoke or fire.

Continued use of the equipment can cause fire or electrical shock.

Do not place liquid-filled containers on the top of the equipment.

Fire or electrical shock can result if a liquid spills into the equipment.

Do not operate the equipment with wet hands.

Electrical shock can result.

Keep heater away from equipment.

Heat can alter equipment shape and melt the power cord, which can cause fire or electrical shock.

⚠ CAUTION

Use the proper fuse.

Use of a wrong fuse can result in fire or permanent equipment damage.

Do not use the equipment for other than its intended purpose.

Personal injury can result if the equipment is used as a chair or stepping stool, for example.

Do not place objects on the top of the equipment.

The equipment can overheat or personal injury can result if the object falls.

* * * C O N T E N T S * * *

SPECIFICATIONS OF IF-5000/IF-5001 INTERFACE UNIT	Page
1. Specifications	1
2. Data Flow in Interface Unit	2
3. Complete Set	3
4. Installation Materials	3
OPERATION	
1. Mode Selection on J5	4
2. Selfcheck	5
INSTALLATION	
1. Mounting of IF-5000 (Separate type)	6
2. Fitting of IF-5001 (Built-in type) in Printer FP-70	6
3. Fabrication of Data Cable	7
4. Connections	7
OUTLINE DRAWINGS	D-1 to D-2
SYSTEM DIAGRAMS	S-1 to S-2
CABLING DIAGRAMS	S-3 to S-9
SCHEMATIC DIAGRAM	S-10

SPECIFICATIONS OF IF-5000/5001 INTERFACE UNIT

The interface unit IF-5000/5001 takes in various navigational data from the satellite navigator, loran coordinator, Decca coordinator, water temperature indicator, echosounder, current indicator, etc., and arranges them in series Comunication Interface Format so that the complex data can be transferred to external devices such as X-Y plotter, Video Plotter, Remote Display, etc. Two types of interfaceunits are available; one is a separate type with independent chassis (IF-5000) and the other is a built-in type (IF5001) which can be fitted in Printer FP-70.

Characteristics

1. Input Data:	Two dual way input terminals for Sat/Nav FSN-20/21/70, loran LC-30/70, Decca Navigator with L/L coordinator DP-80C, Color Video Sounder (Depth) FCV-series, and one single way input terminal for Water Temperature Indicator TI-10D/11D, Curent Indicator CI-20/30.
2. Output Data:	Time, Position in Lat/Long, Loran TD, Speed and Course of Ship, Range and Bearing to Destination or Waypoint, Water Temperature, Water Depth, Direction and Speed of Current at desired Water Depth. Two CIF data output terminals and one Printer output terminal are provided. Multi-distributer MD-300 is required for more than two CIF external devices.
3. Power Supply:	DC 10V to 42V, 10W approx. directly or AC 100/110/220V, 50 to 60Hz, 1 phase (Rectifier needed)
4. Coating Color: (IF-5000)	2.5GY-5/1.5 Newtone No.5 (Cabinet) N3.0 Dark grey, mat (Front Panel)

2. Data Flow in Interface Unit

The following figure shows data flow and examples of equipments which can be connected to each terminal on the interface unit.

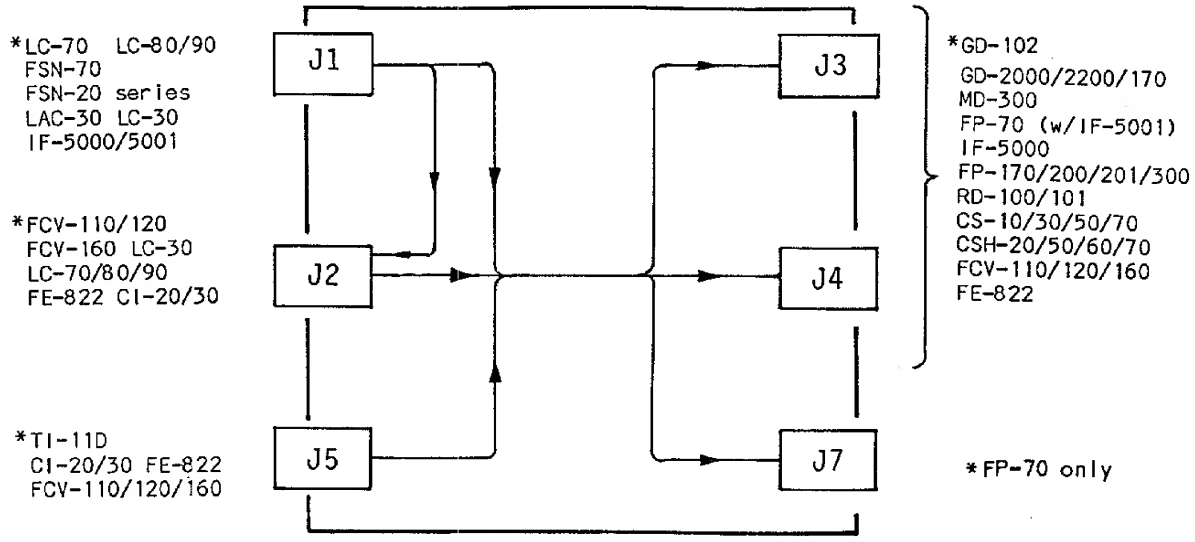

For easy description, it is assumed that equipments marked * above are connected on each terminal. Navigational data(position in Lat./Long. etc.) obtained by LC-70 is indicated on FCV-110/120 & GD-102 and printed out on FP-70. Water depth detected by FCV-110/120 and water temperature detected by TI-11D can be read on GD-102 and FP-70.
It should be taken into account that no water temperature is displayed on FCV-110/120 in this case. If water temperature is required on FCV display, additional interface unit is requested or the temperature indicator TI-11D is needed to be connected directly to LC-70 as below.

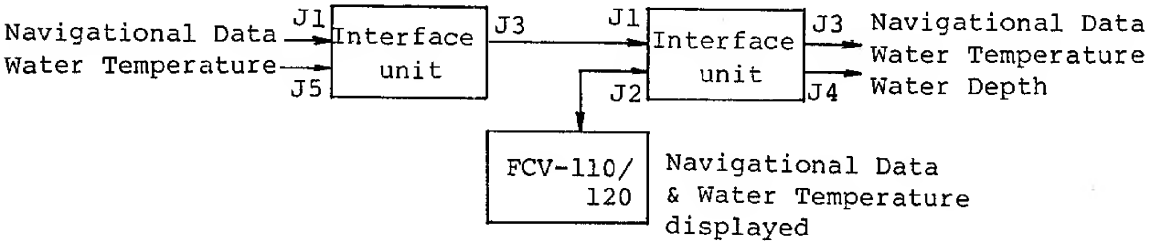

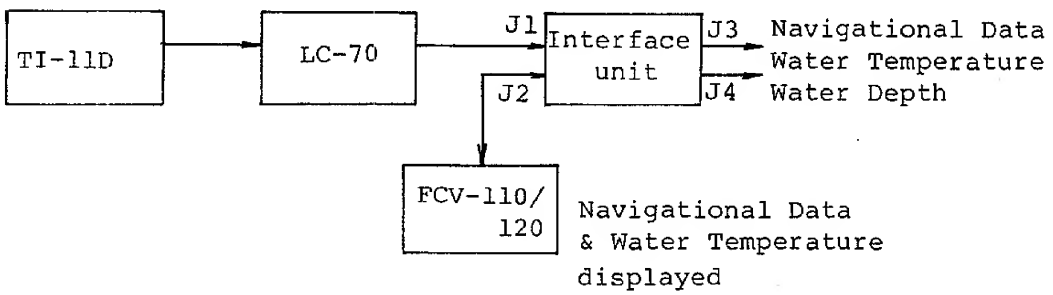

3. Complete Set

A) Separate Type(IF-5000)

No.	Name	Type	Weight	Q'ty	Remarks
1	Main Unit	IF-5000	2.5kg	1	W/Bracket
2	Installation Materials			1 set	
3	Spare Parts			1 set	Fuse, F7161 1.5A, 3 pcs.

B) Built-in Type(IF-5001)

No.	Name	Type	Weight	Q'ty	Remarks
1	Interface PCB	14P0020		1	
2	Installation Materials			1 set	

4. Installation Materials

No.	Name	Specifications	Q'ty	
			IF-5000	IF-5001
1	Mounting Bracket	RUA-1003	1	
2	Knob Bolt	KT-B, M6x10	2	
3	Fibre Washer	M6	2	
4	Woodscrew	ø4.8x25	4	
5	Flat Washer	M5	4	
6	Washerhead Screw	M3x8		5
7	Jumper W/connectors	6P-10P		1
8	Jumper W/connectors	5P-5P		1
9	Connector W/wires	10P	5	
10	Connector W/wires	6P	1	
11	Climp-on Lug	FV2-S3.3	8	5
12	Plastic Tube (Heat-shrink type)	ø3x0.25x0.5m	1	
13	Cable	CO-SPEVV-SB-C, 0.2sqx5P	10m	
14	Label		1	

OPERATION

In normal operation, the operator is only requested to turn on/off the POWER switch.

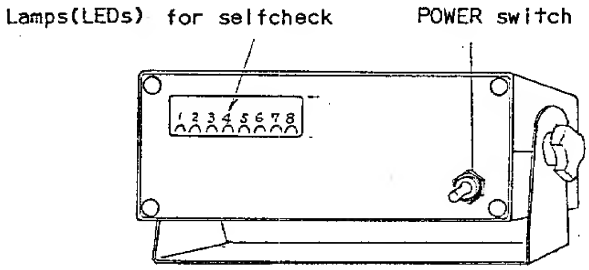

Interface Unit IF-5000

1. Mode Selection on J5

Either Temperature Indicator or Current Indicator can be connected to J5 by changing the setting of DIP switch #1 on the interface PCB. Turning on (or off) the DIP switch #1 allows Temperature Indicator (or Current Indicator) to be connected to J5.

Note: POWER switch should be turned off, and on after changing the setting of DIP switch.

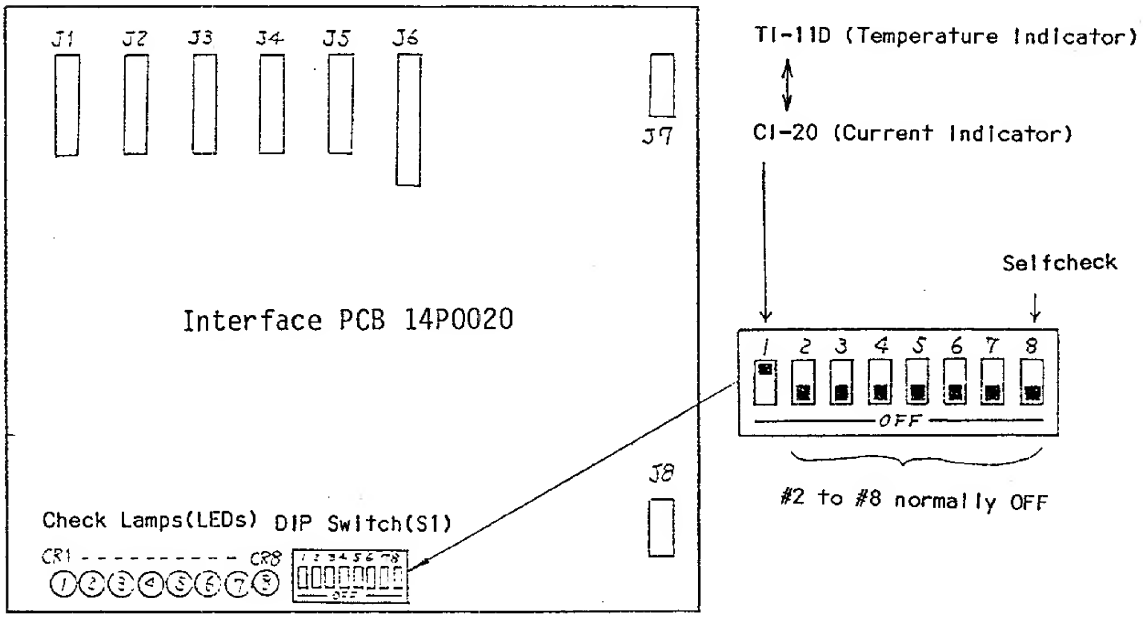

Front

2. Selfcheck

If the unit does not function normally, perform the following selfcheck.

Check of Memory Circuit (ROM/RAM)

ROM/RAM check can be performed automatically upon turning on the POWER switch.
If all the selfcheck lamps on the front panel blink three times at 1 sec interval and go off except the lamp #8, ROM/RAM is normal.

Check of Memory Circuit (ROM/RAM) and Data Input Interface Circuit

By using the DIP switch #8 and check plugs, both ROM/RAM and data input interface circuit can be checked.

(1) Turn on the DIP switch #8, then turn on the POWER switch.

(2) All the selfcheck lamps blink three times at 1 sec interval, then lamps #1, #2 & #6 go off, #3, #4, #5 & #7 remain lighted, #8 keeps blinking with normal ROM/RAM.

(3) Connect the check plugs shown below to the jacks J1, J2, J4 and J5.

(4) If the lamps #3, #4 and #5 go off, the data input interface circuits (corresponding to jacks J1, J2 and J5 respectively) are normal.
If abnormal function exists with the result of selfcheck being normal, it seems that the trouble is in the external navigator (NNSS, loran etc.) combined or on the data transfer line.

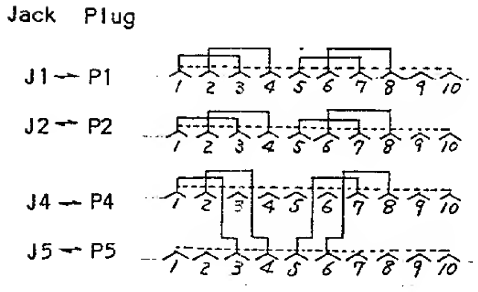

Check Plugs
(to be arranged at the spot)

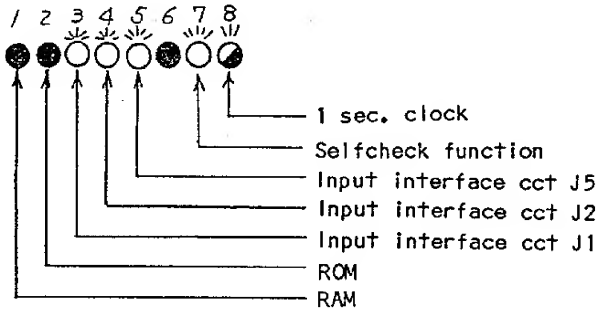

Check Lamps

INSTALLATION

1. Mounting of IF-5000 (Separate type)

   The unit should be located at dry and well ventirated place. It can be mounted with the mounting bracket in tabletop or overhead mount. Refer to page D-1 for the mounting dimensions.

2. Fitting of IF-5001 (Built-in type) in printer FP-70.

   The following describes how to install IF-5001 into Printer FP-70.

   1) Remove the top cover by loosening four screws at both sides of the printer.

   2) Mount the interface PCB 14P0020 with five screws as in the figure below.

   3) Make connections between interface PCB and the printer.
   J7/J8 on the interface PCB are connected to J2/J4 on the printer respectively with supplied cable.

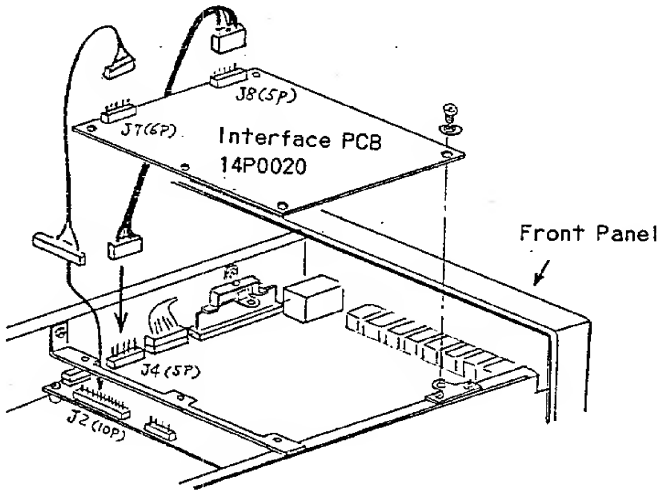

Printer FP-70 with Top Cover removed

3. Fabrication of Data Cable

Fabricate the data cables as below and solder NH connectors to the cable ends, referring to the cabling diagrams.

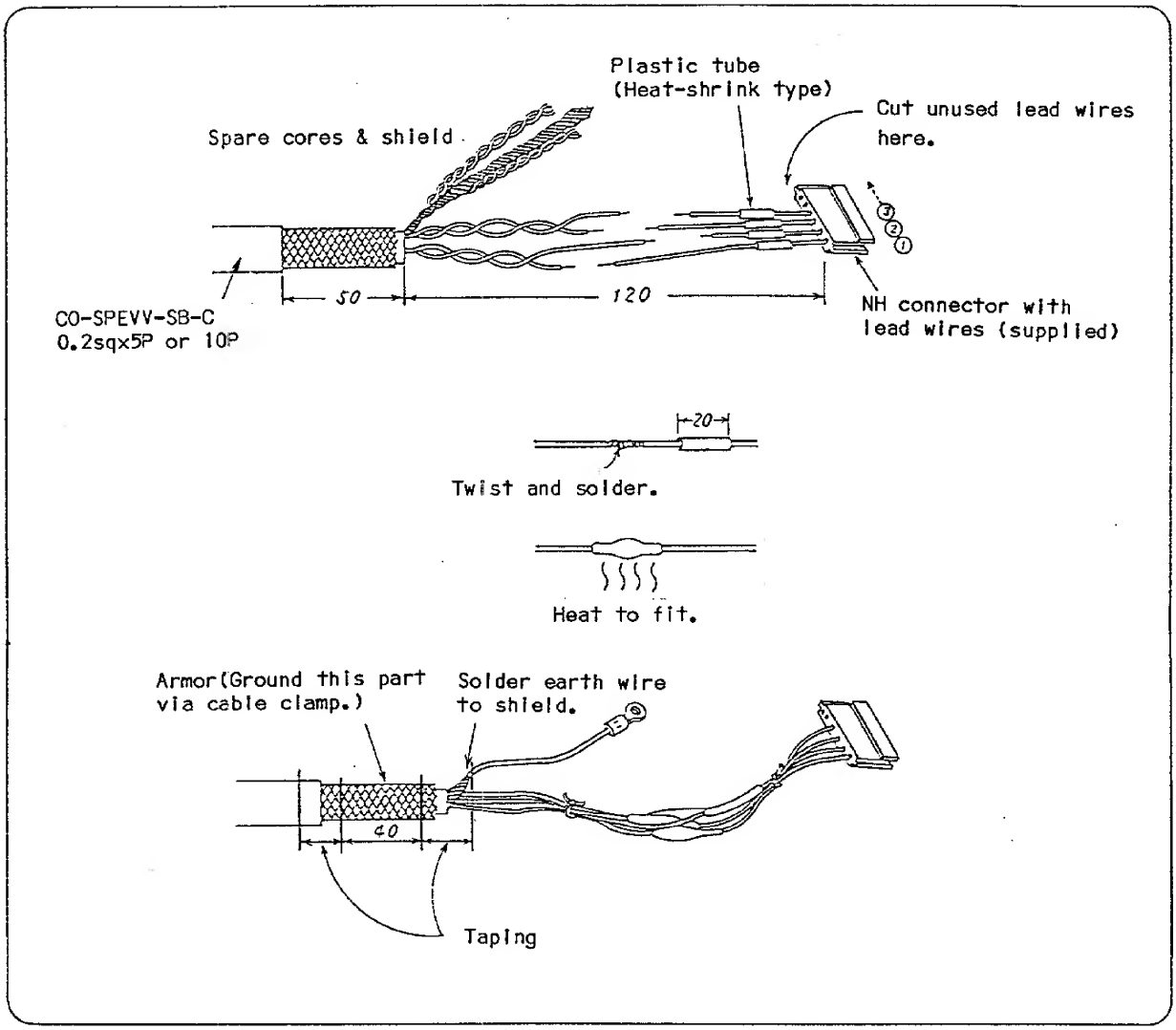

4. Connection

Connect the data cables to the respective jacks on the interface PCB and the power cable to the terminals #1 (+) and #2 (-) on the power supply PCB. Remove the top cover of IF-5000 to get access to jacks and terminals.

FURUNO

D-1

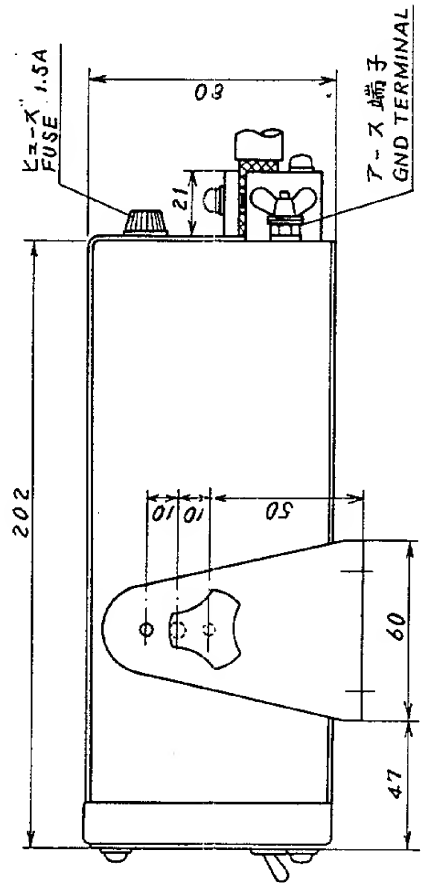

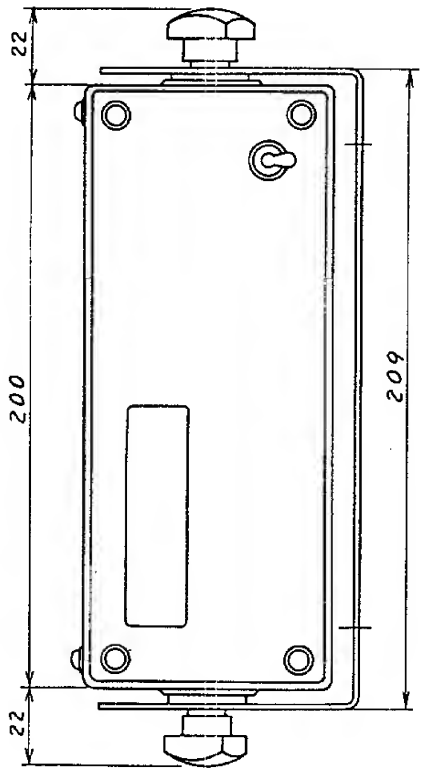

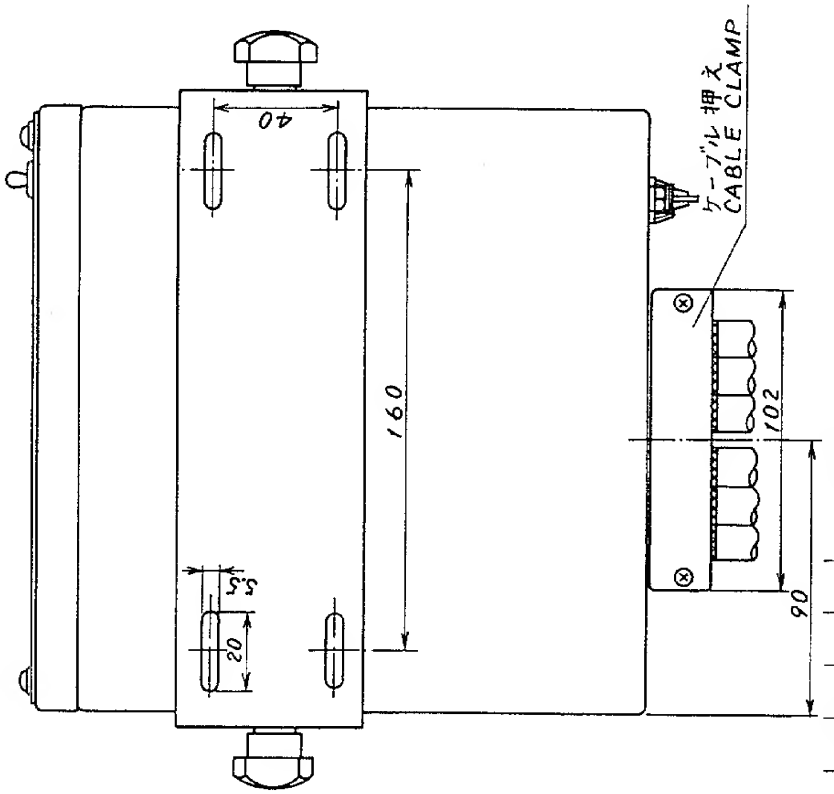

IF-5000/3300 SERIES

品番 ITEM	品名 NAME	材質 MATERIAL	数量 Q'TY	図番 DWG.NO.	摘要 REMARKS

承認 APPROVED	SEP. 14. '81	三角法 THIRD ANGLE PROJECTION		名称 TITLE	インタフェース・ユニット外観図 INTERFACE UNIT
検図 CHECKED	SEP. 14. '81	尺度 SCALE	1/2.5		
製図 DRAWN	Sept. 14. '81	重量 WEIGHT	2.5 kg	図番 DWG. NO.	C4274-001-B

FURUNO ELECTRIC CO., LTD.

FURUNO

D - 2

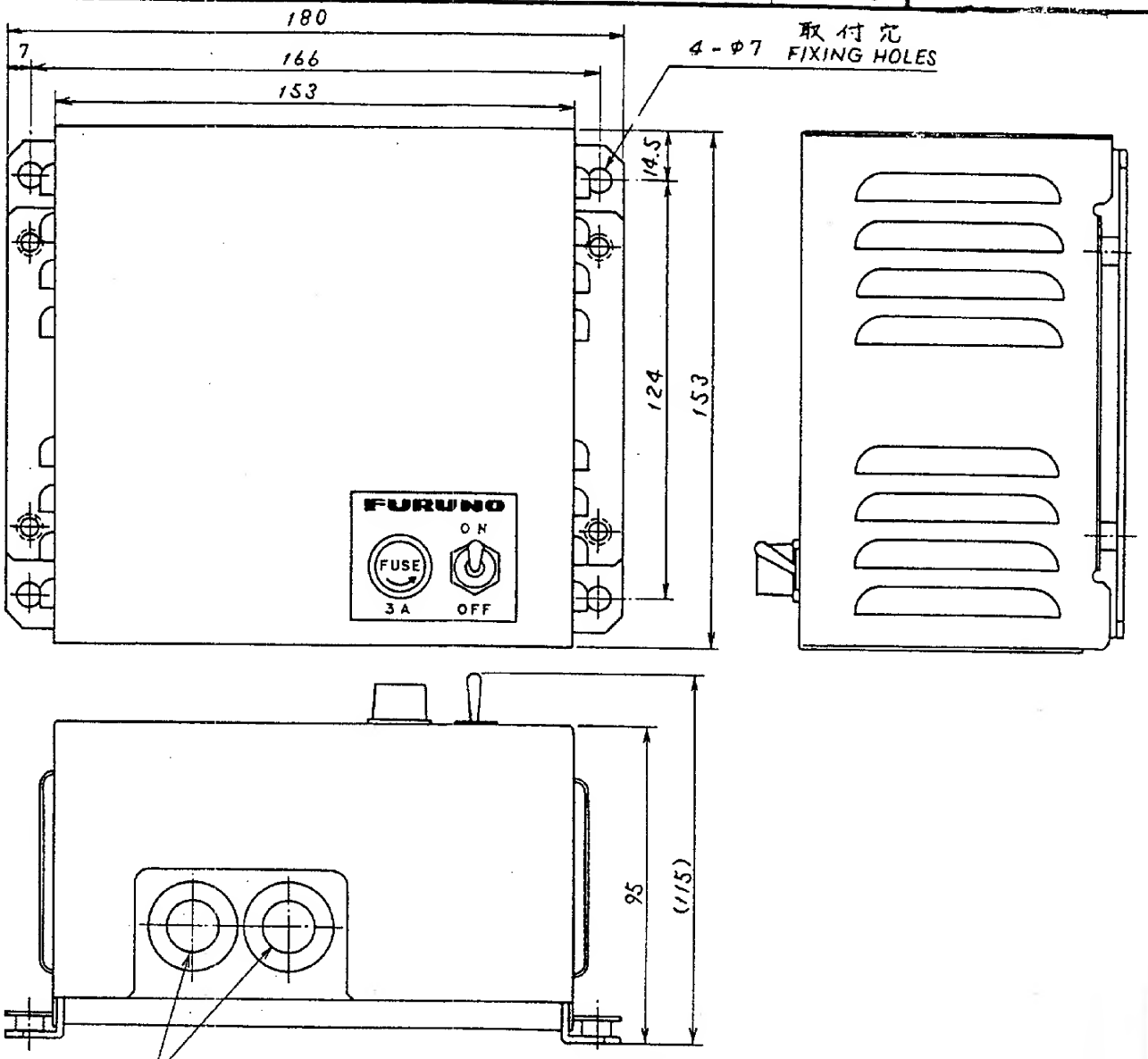

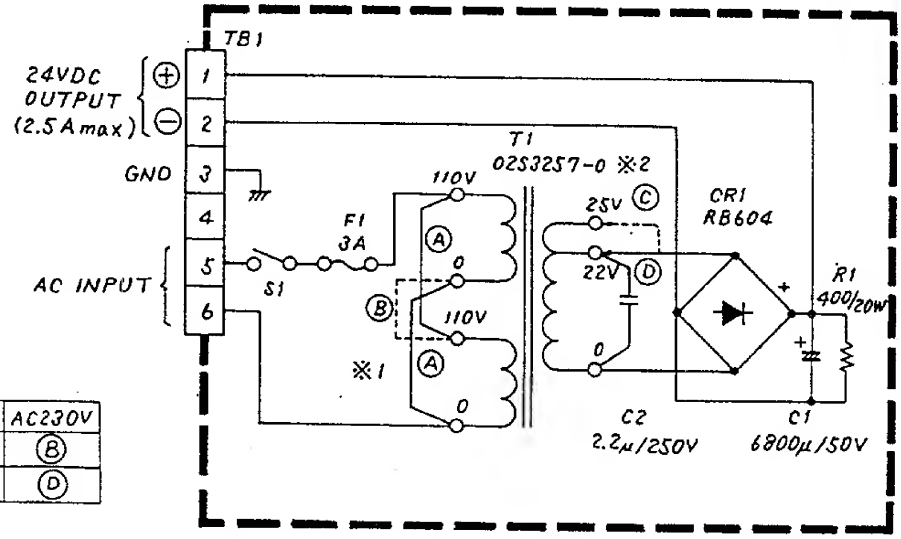

	AC100V	AC110V	AC220V	AC230V
※1	Ⓐ	Ⓐ	Ⓑ	Ⓑ
※2	Ⓒ	Ⓓ	Ⓓ	Ⓓ

品番 ITEM	品名 NAME	材質 MATERIAL	数量 Q'TY	図番 DWG.NO.	摘要 REMARKS

承認 APPROVED	JUN.14 '89	三角法 THIRD ANGLE PROJECTION		名称 TITLE	PR-62 整流器外観図 RECTIFIER UNIT
検図 CHECKED		尺度 SCALE	1/2		
製図 DRAWN		重量 WEIGHT	3 kg	図番 DWG.NO.	C5003-034-C

FURUNO ELECTRIC CO., LTD.

FURUNO

S - 1

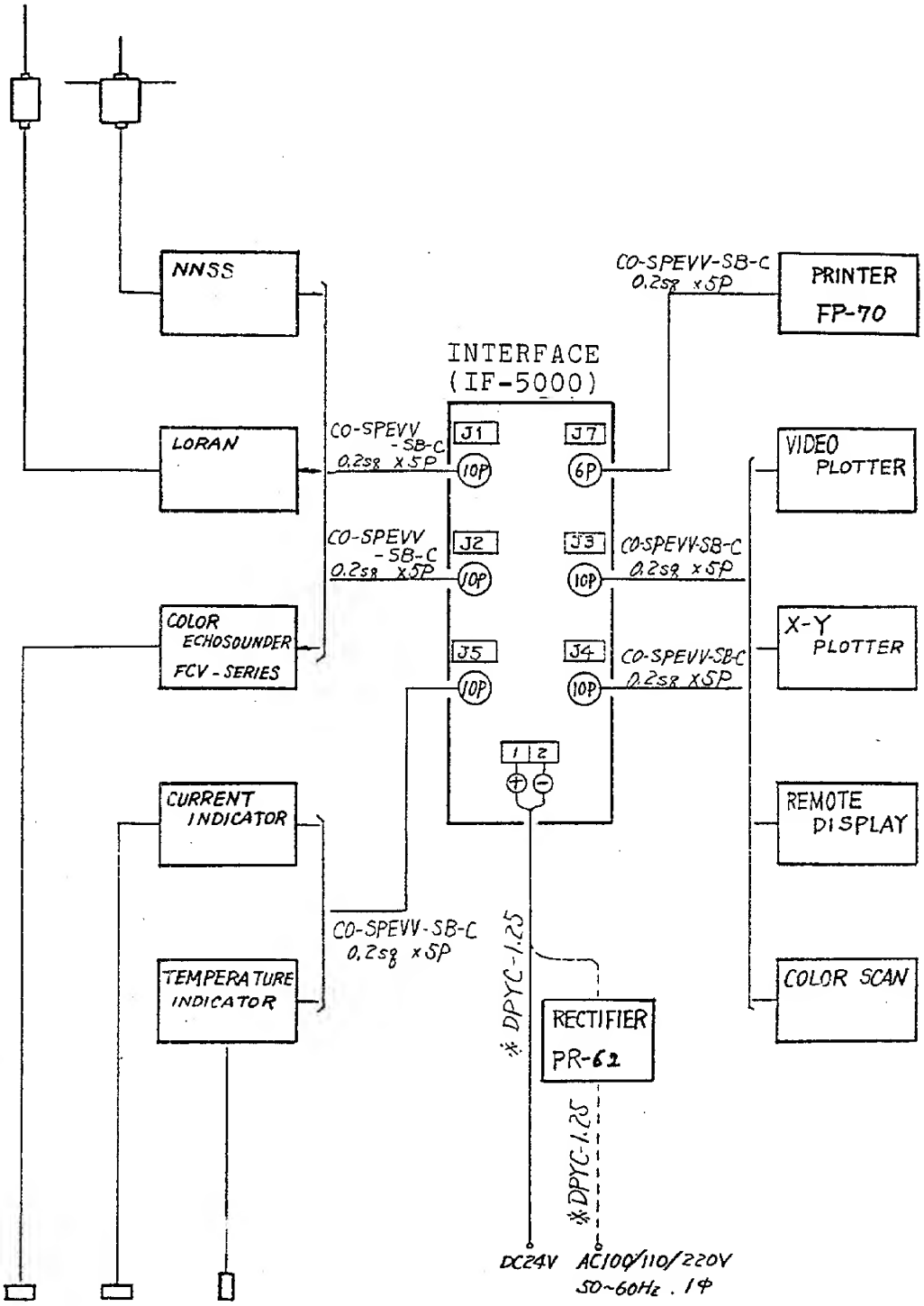

※造船所支給
SHIPYARD SUPPLY

IF-5000	品番 ITEM	品名 NAME	材質 MATERIAL	数量 Q'TY	図番 DWG.NO.	摘要 REMARKS
承認 APPROVED	三角法 THIRD ANGLE PROJECTION		名称 TITLE	インターフェースユニット相互連絡図		
検図 CHECKED	尺度 SCALE	/		INTERFACE UNIT SYSTEM DIAGRAM		
製図 DRAWN K K	重量 WEIGHT	kg	図番 DWG.NO.			

FURUNO ELECTRIC CO., LTD.

FURUNO

S - 2

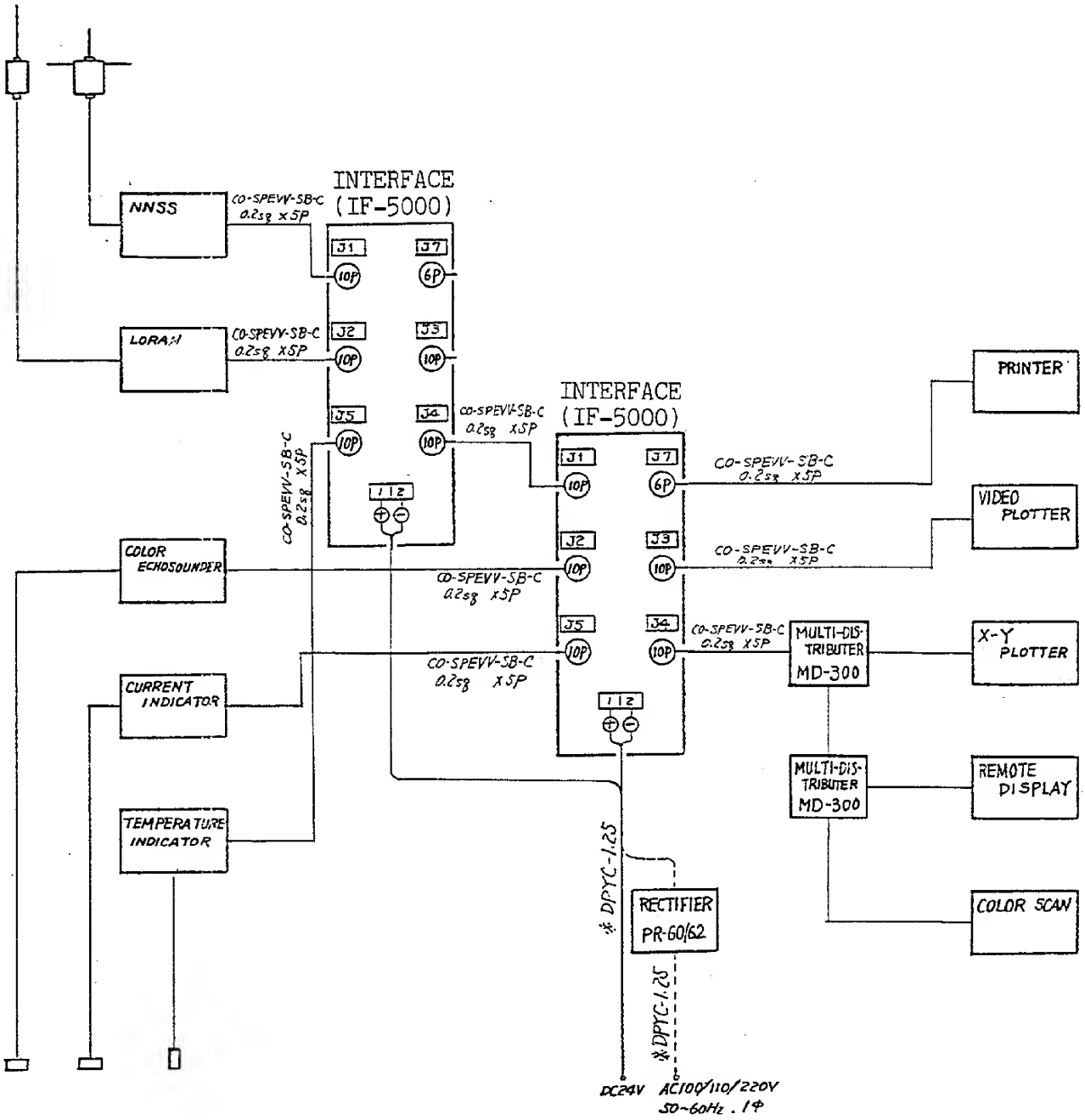

※造船所支給
SHIPYARD SUPPLY

IF-5000

品番 ITEM	品名 NAME	材質 MATERIAL	数量 Q'TY	図番 DWG.NO.	摘要 REMARKS

承認 APPROVED		三角法 THIRD ANGLE PROJECTION	名称 TITLE インターフェースユニット相互連絡図
検図 CHECKED		尺度 SCALE /	INTERFACE UNIT SYSTEM DIAGRAM
製図 DRAWN	K. K	重量 WEIGHT kg	図番 DWG.NO.

FURUNO ELECTRIC CO., LTD.

FURUNO

S - 3

IF-5000 インターフェイスユニット
INTERFACE UNIT

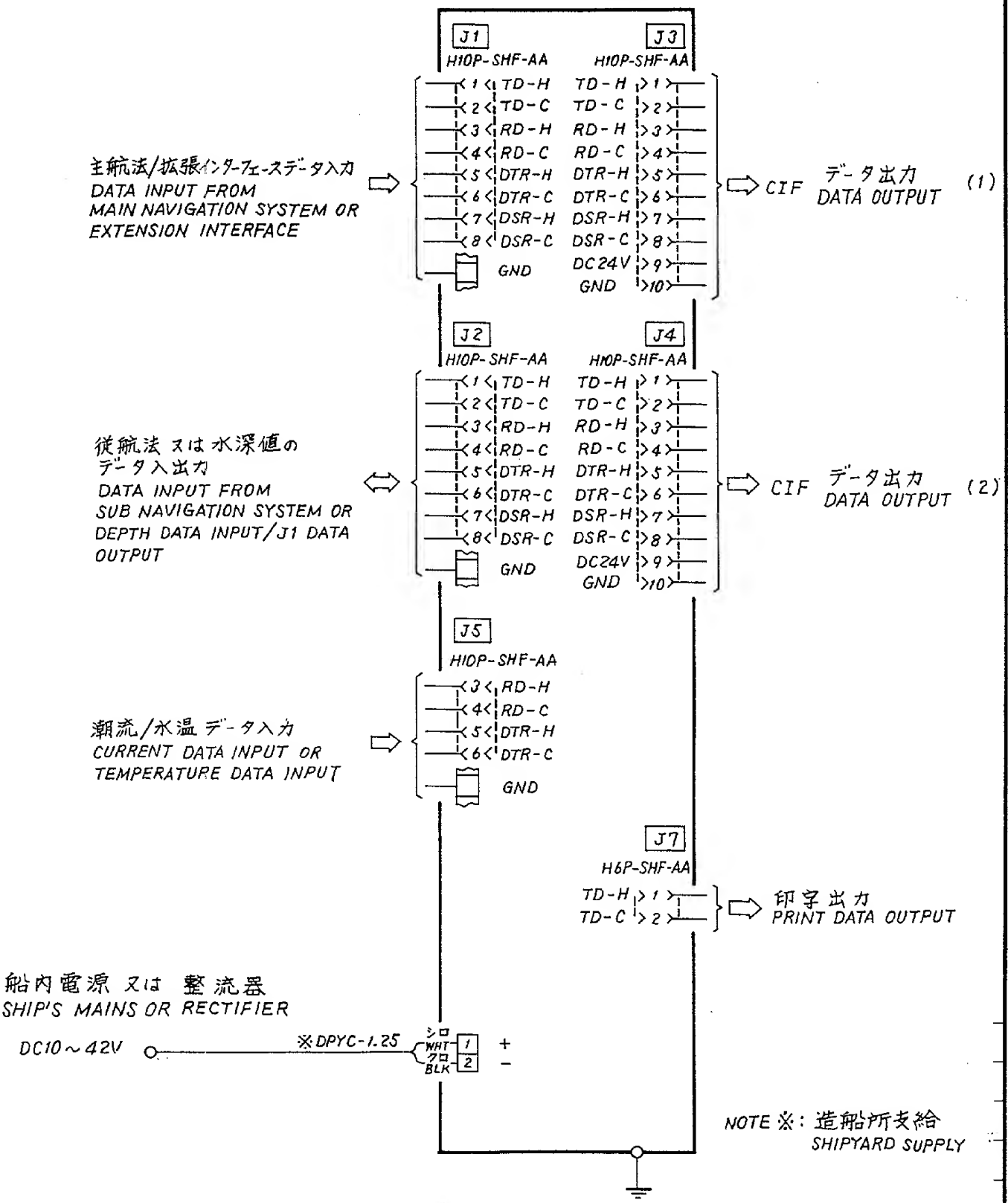

品番 ITEM	品名 NAME	材質 MATERIAL	数量 Q'TY	図番 DWG.NO.	摘要 REMARKS

承認 APPROVED	FEB·20·'87 T.NAKANO	三角法 THIRD ANGLE PROJECTION		名称 TITLE	IF-5000 インターフェース入出力図 INTERFACE I/O CONNECTION
検図 CHECKED	Feb·20·'87 I.Amano	尺度 SCALE	/		
製図 DRAWN	Feb·19·'87 M.Matsumoto	重量 WEIGHT	kg	図番 DWG.NO.	C4274-007-A

FURUNO ELECTRIC CO., LTD.

FP-70/IF-5001 プリンター PRINTER

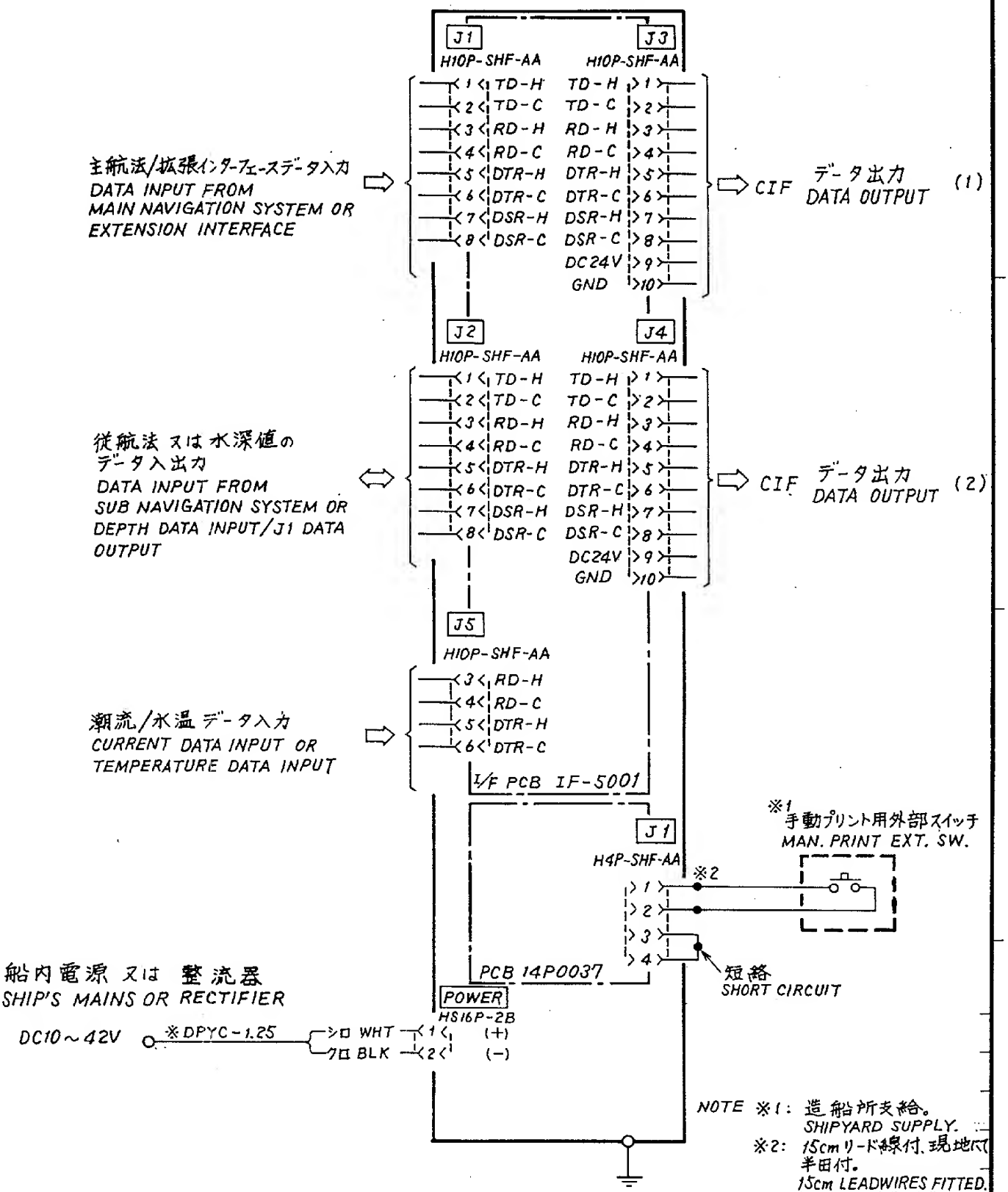

NOTE ※1: 造船所支給。 SHIPYARD SUPPLY.
※2: 15cmリード線付、現地にて半田付。 15cm LEADWIRES FITTED. SOLDER IN FIELD.

品番 ITEM	品名 NAME	材質 MATERIAL	数量 Q'TY	図番 DWG.NO.	摘要 REMARKS

承認 APPROVED	FEB·20·'87 T. NAKANO	三角法 THIRD ANGLE PROJECTION		名称 TITLE	FP-70/IF-5001 プリンター入出力図 PRINTER I/O CONNECTION
検図 CHECKED	Feb·20·'87 I. Amano	尺度 SCALE	/		
製図 DRAWN	Feb·19·'87 M. Matsuura	重量 WEIGHT	kg	図番 DWG.NO.	C4272-009-A

FURUNO ELECTRIC CO., LTD.

FURUNO

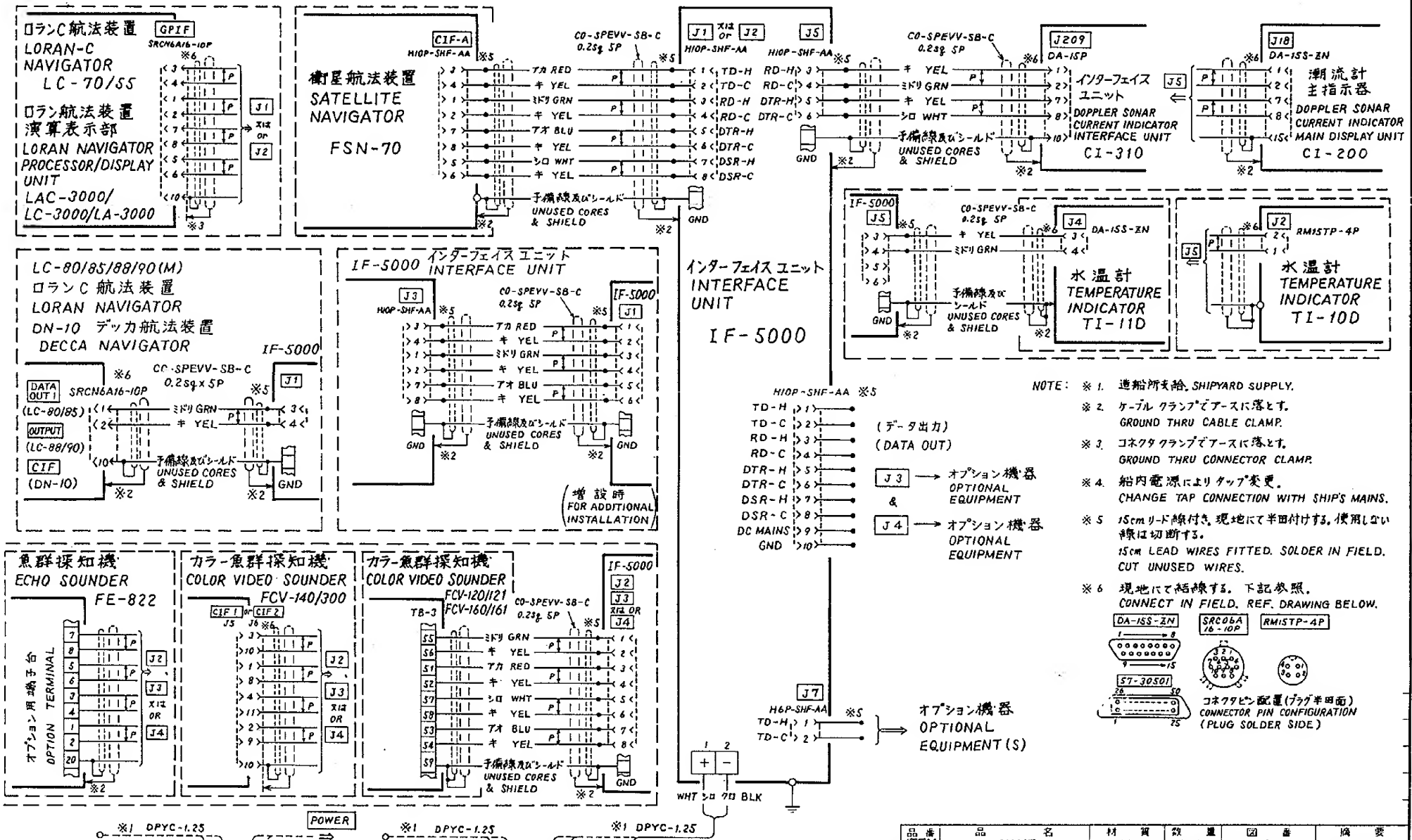

NOTE:

※1. 造船所支給. SHIPYARD SUPPLY.

※2. ケーブル クランプでアースに落とす. GROUND THRU CABLE CLAMP.

※3. コネクタ クランプでアースに落とす. GROUND THRU CONNECTOR CLAMP.

※4. 船内電源によりタップ変更. CHANGE TAP CONNECTION WITH SHIP'S MAINS.

※5. 15cmリード線付き. 現地にて半田付けする. 使用しない線は切断する. 15cm LEAD WIRES FITTED. SOLDER IN FIELD. CUT UNUSED WIRES.

※6. 現地にて結線する. 下記参照. CONNECT IN FIELD. REF. DRAWING BELOW.

DA-15S-ZN SRC06A 16-10P RM15TP-4P

57-30501

コネクタピン配置(プラグ半田面) CONNECTOR PIN CONFIGURATION (PLUG SOLDER SIDE)

ITEM 品番	NAME 品名	MATERIAL 材質	Q'TY 数量	DWG.NO. 図番	REMARKS 摘要

APPROVED 承認	NOV. 27. '81	THIRD ANGLE PROJECTION 三角法	TITLE 名称 IF-5000 インターフェイス ユニット相互結線図 INTERFACE UNIT
CHECKED 検図	NOV. 26. '81	SCALE 尺度	
DRAWN 製図	Nov. 26. '81	WEIGHT 重量 kg	DWG.NO. 図番 C4274-003-F

FURUNO ELECTRIC CO., LTD.

S-15

FURUNO

プリンター PRINTER FP-70

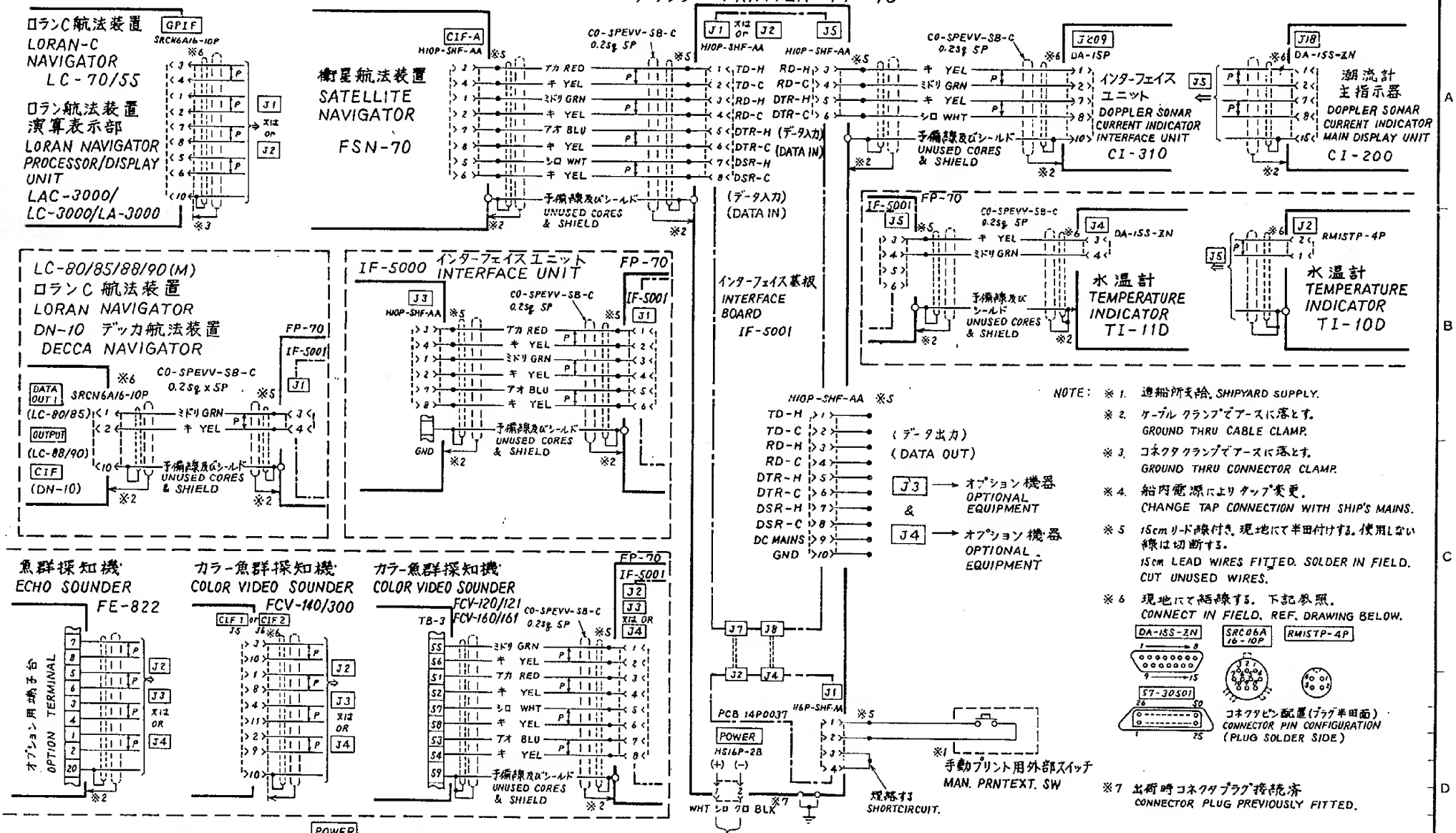

NOTE:

※1. 造船所支給. SHIPYARD SUPPLY.

※2. ケーブル クランプでアースに落とす. GROUND THRU CABLE CLAMP.

※3. コネクタ クランプでアースに落とす. GROUND THRU CONNECTOR CLAMP.

※4. 船内電源によりタップ変更. CHANGE TAP CONNECTION WITH SHIP'S MAINS.

※5 15cmリード線付き. 現地にて半田付けする. 使用しない線は切断する. 15cm LEAD WIRES FITTED. SOLDER IN FIELD. CUT UNUSED WIRES.

※6 現地にて結線する. 下記参照. CONNECT IN FIELD. REF. DRAWING BELOW.

※7 出荷時コネクタプラグ接続済 CONNECTOR PLUG PREVIOUSLY FITTED.

ITEM 品番	NAME 品名	MATERIAL 材質	Q'TY 数量	DWG.NO. 図番	REMARKS 摘要

APPROVED 承認	DEC. 7 '81	THIRD ANGLE PROJECTION 三角法	TITLE 名称 プリンター(インターフェイス基板 IF-5001付) 相互結線図 FP-70 PRINTER WITH INTERFACE BOARD IF-5001
CHECKED 検図	DEC. 7 '81	SCALE 尺度	
DRAWN 製図	DEC. 7 '81	WEIGHT 重量 kg	DWG.NO. 図番 C4272-005-J

FURUNO ELECTRIC CO., LTD.

FURUNO

S - 7

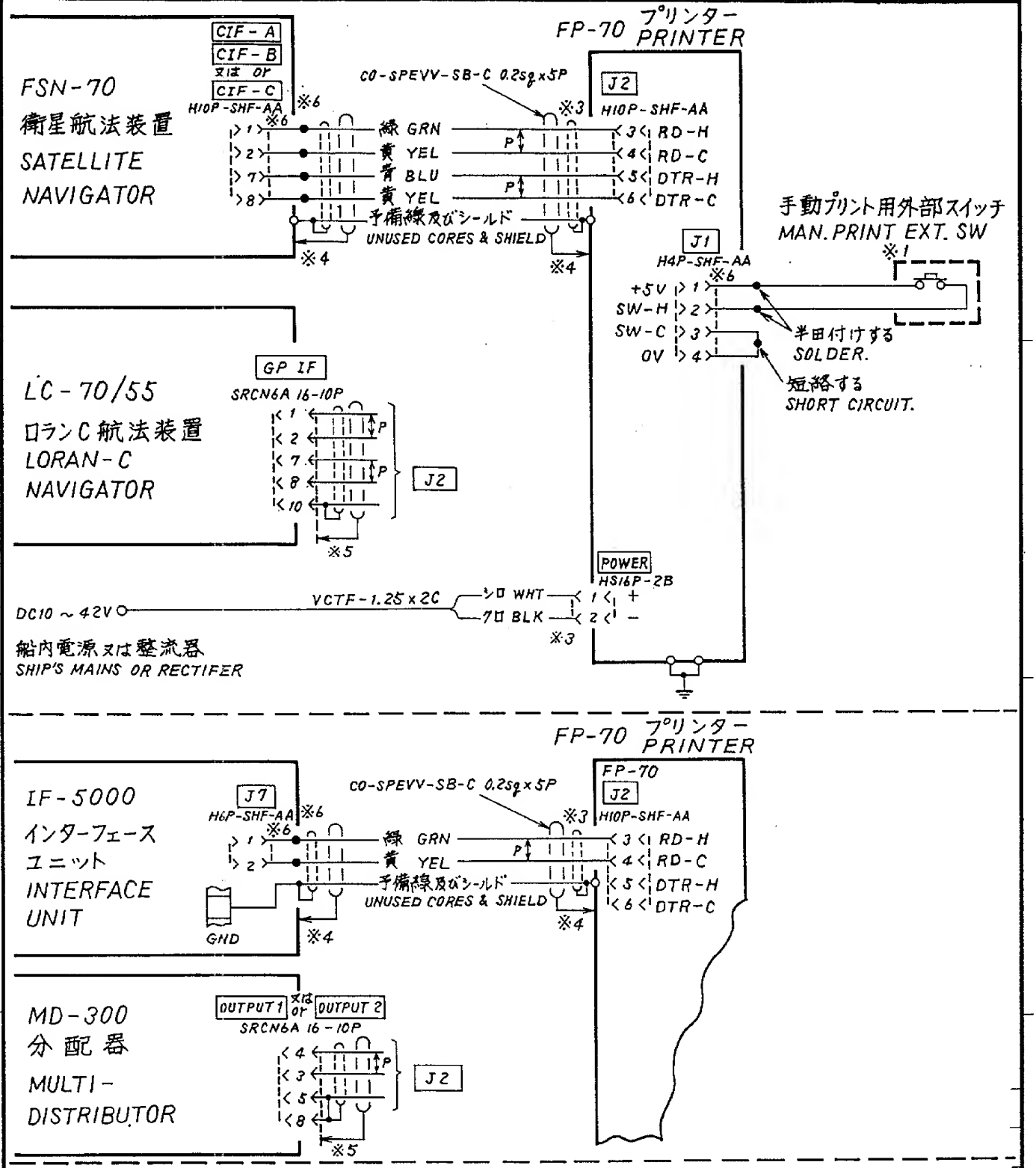

NOTE

※1. 造船所支給。 SHIPYARD SUPPLY.

※3. 出荷時コネクタプラグ接続済。 CONNECTOR PLUG FACTORY-WIRED.

※4. ケーブルクランプでアースに落とす。 GROUND THRU CABLE CLAMP.

※5. コネクタークランプでアースに落とす。 GROUND THRU CONNECTOR CLAMP.

※6. 15cm リード線付。現地で半田付けする。使用しない線は切断する。
15cm WIRES FITTED. SOLDER IN FIELD CUT UNUSED WIRES.

承認 APPROVED	MAR. 3 '87 T. NAKANO	三角法 THIRD ANGLE PROJECTION	名称 TITLE: フプリンター 相互結線図 FP-70 PRINTER INTERCONNECTION DIAGRAM
検図 CHECKED	Feb. 27 '87 I. Amano	尺度 SCALE /	
製図 DRAWN	Feb. 28 '87 M. Matsuura	重量 WEIGHT kg	図番 DWG.NO. C4272-004-G

FURUNO ELECTRIC CO., LTD.

FURUNO

S - 8

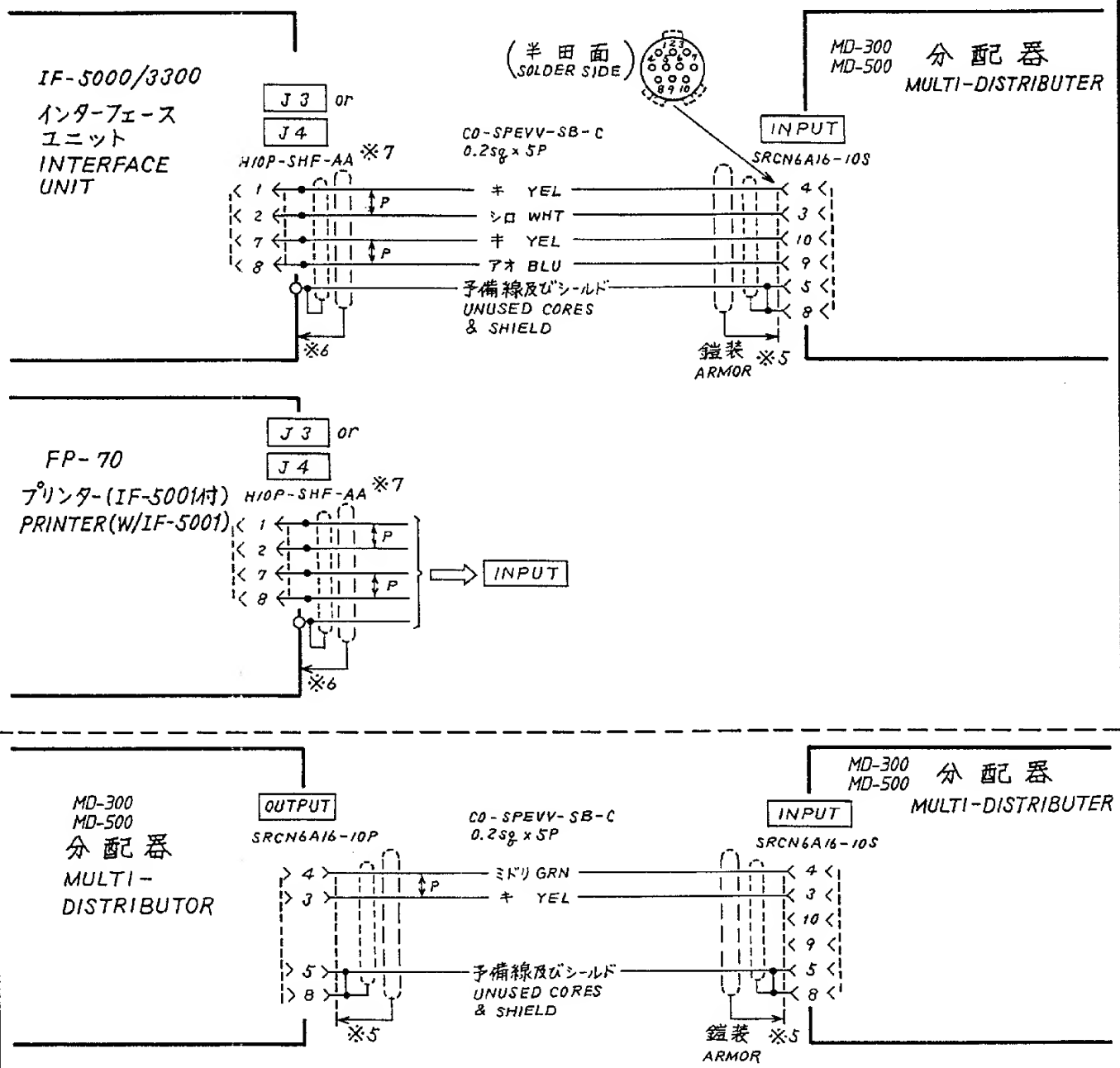

※4. P ツイスト ペアー TWISTED PAIR

※5. コネクタのクランプでアースする。
GROUND THRU CONNECTOR CLAMP.

※6. ケーブル クランプでアースする。
GROUND THRU CABLE CLAMP.

※7. 15cm リード線付き、現地にて半田付けする。
使用しない線は切断する。
15cm LEAD WIRES FITTED. SOLDER IN FIELD.
CUT UNUSED WIRES.

品番 ITEM	品名 NAME	材質 MATERIAL	数量 Q'TY	図番 DWG.NO.	摘要 REMARKS

承認 APPROVED	JULY. 20. '87 T.NAKANO	三角法 THIRD ANGLE PROJECTION		名称 TITLE	MD-300 MD-500 分配器相互結線図 MULTI DISTRIBUTOR (インターフェース INTERFACE → 入力側 INPUT SIDE)
検図 CHECKED	July. 20. '87 I. Amano	尺度 SCALE	/		
製図 DRAWN	July. 16. '87 K. Kuroda	重量 WEIGHT	kg	図番 DWG. NO.	C4252-021-B

FURUNO ELECTRIC CO., LTD.

FURUNO

S - 9

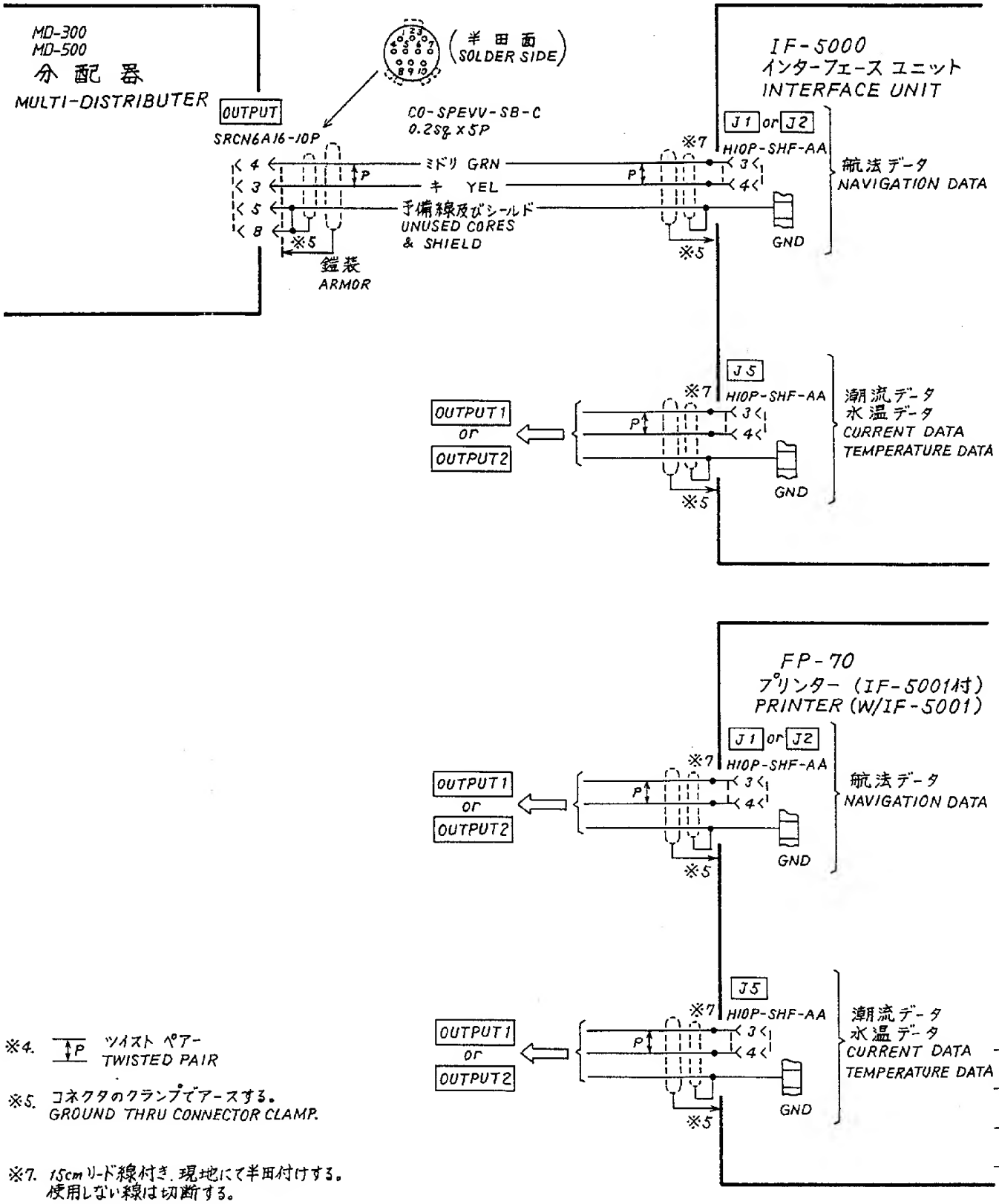

※4. P ツイスト ペアー TWISTED PAIR

※5. コネクタのクランプでアースする。 GROUND THRU CONNECTOR CLAMP.

※7. 15cm リード線付き、現地にて半田付けする。 使用しない線は切断する。 15cm LEAD WIRES FITTED SOLDER IN FIELD. CUT UNUSED WIRES.

品番 ITEM	品名 NAME	材質 MATERIAL	数量 Q'TY	図番 DWG.NO.	摘要 REMARKS

承認 APPROVED	JULY. 17. '87 T. NAKANO	三角法 THIRD ANGLE PROJECTION		名称 TITLE	MD-300 MD-500 分配器相互結線図 MULTI DISTRIBUTOR (出力側 OUTPUT SIDE → インターフェース INTERFACE)
検図 CHECKED	July. 16. '87 I. Amano	尺度 SCALE	/		
製図 DRAWN	July. 16. '87 K. Hiramatsu	重量 WEIGHT	kg	図番 DWG. NO.	C4252-020-B

FURUNO ELECTRIC CO., LTD.

FURUNO

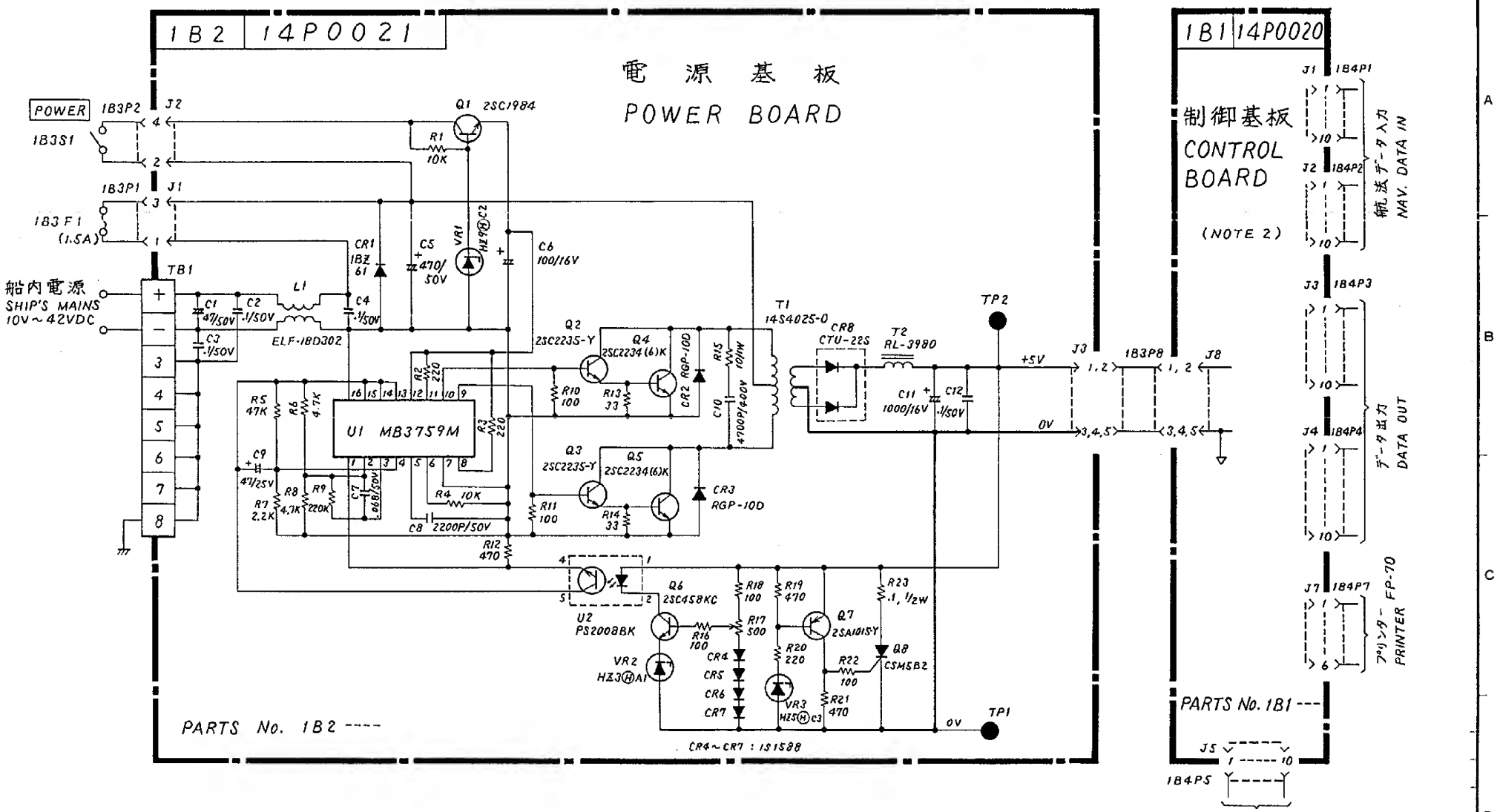

NOTE 1. 特記なき抵抗の単位はΩ, 1/4W, コンデンサはμF.
ALL RESISTANCE IN OHMS 1/4W AND CAPACITANCE IN MICROFARADS UNLESS NOTED OTHERWISE.
2. 制御基板の回路図は非公開.
SCHEMATIC DIAGRAM FOR CONTROL BOARD IS NOT PUBLISHED.

品番 ITEM	品名 NAME	材質 MATERIAL	数量 Q'TY	図番 DWG. NO.	摘要 REMARKS

承認 APPROVED	三角法 THIRD ANGLE PROJECTION	名称 TITLE	IF-5000 インターフェースユニット回路図 INTERFACE UNIT
検図 CHECKED	尺度 SCALE		
製図 DRAWN	重量 WEIGHT kg	図番 DWG. NO.	C4274-005-A

FURUNO ELECTRIC CO., LTD.

FURUNO

REVISION RECORD OF OPERATOR'S/INSTALLATION MANUAL

MODEL: IF-5000/5001 PUBLICATION NO.: OM-E4274-0

REV. NO.	DATE	REVISED PAGE	DETAILS	PERSON IN CHG.
A		———	First Edition	
N	'97.1	i、ii	PL記述追加	三好
		iii	ページ付け	
		S-3	C4274-003-H → C4274-007-A	
		S-4	C4272-005-J → C4272-009-A	
		S-5	C4272-004-G → C4274-003-H	
		S-6	C4247-001-J → C4272-005-J	
		S-7	C4245-005-D → C4272-004-G	
		S-8	C4271-005-E → C4252-021-B	
		S-9	C4252-002H → C4252-020-13	
		S-10	C4249-001-J → C4274-005-A	
		S-11~S-14	図面削除	